IEC Appliance Inlet C14 with Line Switch 2-pole

Snap-in version

Screw-on mounting

Screw-on mounting

C14

70° C

See below:
**Approvals and Compliances**

## Description

- Panel mount :
  Screw-on version from front or rear side, snap-in version from front side
- 2 Functions :
  Appliance Inlet Protection class I , Line Switch 2-pole
- Quick connect terminals 4.8 x 0.8 mm

## Characteristics

- All single elements are already wired
- Unwired versions available on request
- Line switch non-illuminated or illuminated

## Other versions on request

- Unwired versions
- Line switch with other rocker marking
- For protection class II

## References

Alternative: version with line filter KFB2
We recommend for new applications DC11

## Weblinks

pdf data sheet, html data sheet, General Product Information, Distributor-Stock-Check, Accessories, Detailed request for product

## Technical Data

| | |
|---|---|
| Ratings IEC | 10 A / 250 VAC; 50 Hz |
| Ratings UL/CSA | 15 A / 250 VAC; 60 Hz |
| Dielectric Strength | > 2.5 kVAC between L-N<br>> 3 kVAC between L/N-PE<br>(1 min/50 Hz) |
| Allowable Operation Temperature | -25 °C to 70 °C |
| IP-Protection | from front side IP40 acc. to IEC 60529 |
| Insulation cover | Suitable for appliances with protection class I acc. to IEC 61140 |
| Terminal | Quick connect terminals 4.8 x 0.8 mm |
| Panel Thickness S | Screw: max 6 mm<br>Mounting screw torque max 0.5 Nm<br>Snap-in: 1.5/2/2.5 mm |
| Material: Housing | Thermoplastic, black, UL 94V-0 |

| | |
|---|---|
| appliance inlet/-outlet | C14 acc. to IEC 60320-1,<br>UL 498, CSA C22.2 no. 42 (for cold conditions) pin-temperature 70 °C, 10 A, Protection Class I |
| Line Switch | Rocker switch 2-pole, non-illuminated or illuminated, acc. to IEC 61058-1<br>Technical Details |

## Approvals and Compliances

Detailed information on product approvals, code requirements, usage instructions and detailed test conditions can be looked up in Details about Approvals

SCHURTER products are designed for use in industrial environments. They have approvals from independent testing bodies according to national and international standards. Products with specific characteristics and requirements such as required in the automotive sector according to IATF 16949, medical technology according to ISO 13485 or in the aerospace industry can be offered exclusively with customer-specific, individual agreements by SCHURTER.

## Approvals

The approval mark is used by the testing authorities to certify compliance with the safety requirements placed on electronic products.

Approval Reference Type: KEB2

| Approval Logo | Certificates | Certification Body | Description |
|---|---|---|---|
| | VDE Approvals | VDE | VDE Certificate Number: 40021945 |
| | UL Approvals | UL | UL File Number: E96454 |
| | CSA Approvals | CSA | CSA Certification Record: 38456 |
| | CCC Approvals | CCC | CCC Certificate Number: |

## Product standards

Product standards that are referenced

| Organization | Design | Standard | Description |
|---|---|---|---|
| IEC | Designed according to | IEC 60320-1 | Appliance couplers for household and similar general purposes |
| IEC | Designed according to | IEC 61058-1 | Switches for appliances. Part 1. General requirements |
| UL | Designed according to | UL 498 | Standard for Attachment Plugs and Receptacles |
| CSA Group | Designed according to | CSA C22.2 no. 42 | General Use Receptacles, Attachment Plugs, and Similar Wiring Devices |

## Application standards

Application standards where the product can be used

| Organization | Design | Standard | Description |
|---|---|---|---|
| IEC | Designed for applications acc. | IEC/UL 60950 | IEC 60950-1 includes the basic requirements for the safety of information technology equipment. |

## Compliances

The product complies with following Guide Lines

| Identification | Details | Initiator | Description |
|---|---|---|---|
| CE | CE declaration of conformity | SCHURTER AG | The CE marking declares that the product complies with the applicable requirements laid down in the harmonisation of Community legislation on its affixing in accordance with EU Regulation 765/2008. |
| RoHS | RoHS | SCHURTER AG | Directive RoHS 2011/65/EU, Amendment (EU) 2015/836 |
| | China RoHS | SCHURTER AG | The law SJ / T 11363-2006 (China RoHS) has been in force since 1 March 2007. It is similar to the EU directive RoHS. |
| REACH | REACH | SCHURTER AG | On 1 June 2007, Regulation (EC) No 1907/2006 on the Registration, Evaluation, Authorization and Restriction of Chemicals 1 (abbreviated as "REACH") entered into force. |

## Dimensions [mm]

Screw-on mounting

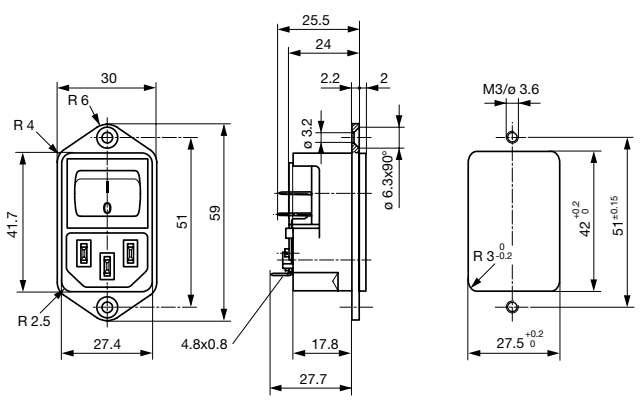


Snap-in mounting

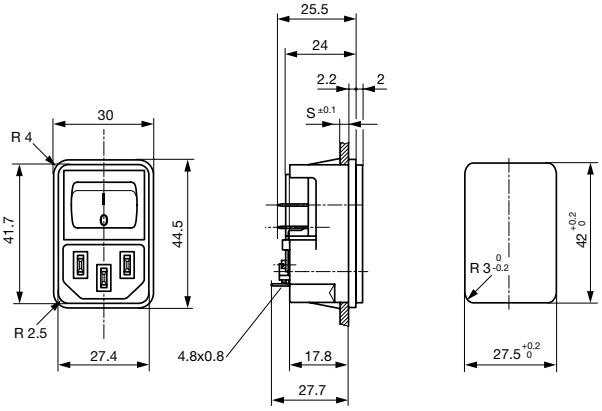

## Diagrams

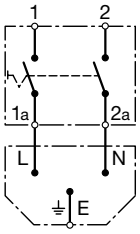


non-illuminated

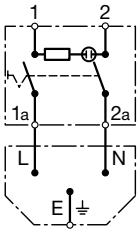


illuminated

## All Variants

| Panel mounting | Panel Thickness s [mm] | Illumination | Rated voltage 125/250 [V] | Color | Order Number | |
|---|---|---|---|---|---|---|
| Snap-in | 1.5 | ● | 250 | red | 4302.2102 | ▮ |
| Snap-in | 1.5 | ● | 250 | green | 4302.2142 | |
| Snap-in | 2 | ● | 250 | red | 4302.2103 | |
| Snap-in | 2 | ● | 250 | green | 4302.2143 | |
| Snap-in | 2.5 | ● | 250 | red | 4302.2104 | |
| Snap-in | 2.5 | ● | 250 | green | 4302.2144 | |
| Snap-in | 1.5 | | - | - | 4302.2002 | ▮ |
| Snap-in | 2 | | - | - | 4302.2003 | ▮ |
| Snap-in | 2.5 | | - | - | 4302.2004 | ▮ |
| Screw | - | ● | 250 | red | 4302.2101 | ▮ |
| Screw | - | ● | 250 | green | 4302.2141 | ▮ |
| Screw | - | | - | - | 4302.2001 | ▮ |

▮ Most Popular.

Availability for all products can be searched real-time:https://www.schurter.com/en/Stock-Check/Stock-Check-SCHURTER

**Packaging unit** 50 Pcs

## Accessories

| | Description | |
|---|---|---|
| | Assorted Covers<br>Rear Cover | |
| | | 0859.0075 |
| | Cord retaining kits<br>Cord retaining strain relief | |
| | Flat head, A | 4700.0001 |

## Mating Outlets/Connectors

| Category / Description | |
|---|---|
| Appliance Outlet Overview complete | |
| 4787, Mounting: Screw-on mounting, Appliance Outlet: IEC Solder terminals, 10 A, Suitable for appliances with protection class I | 4787 |
| 4788, Mounting: Snap-in version, Appliance Outlet: IEC Solder terminals or quick connect terminals, 10 A, Suitable for appliances with protection class I | 4788 |
| IEC Appliance Outlet F or H, Screw-on Mounting, Front Side, Solder, PCB or Quick-connect Terminal | 5091 |
| Appliance Outlet further types to KEB2 | |
| Connector Overview complete | |
| 4782 Mounting: Power Cord, 3 x 1 mm² / 3 x 18 AWG, Cable, Connector: IEC C13 | 4782 |
| 4785 Mounting: Power Cord, 3 x 1 mm² / 3 x 18 AWG, Cable, Connector: IEC C13 | 4785 |
| 4300-06 Mounting: Power Cord, 3 x 1 mm² / 3 x 18 AWG, Cable, Connector: IEC C13 | 4300-06 |
| 4781 Mounting: Power Cord, 3 x 1 mm² / 3 x 18 AWG, Cable, Connector: IEC C15 | 4781 |
| 4784 Mounting: Power Cord, 3 x 1 mm² / 3 x 18 AWG, Cable, Connector: IEC C15 | 4784 |
| Connector further types to KEB2 | ... |



The specifications, descriptions and illustrations indicated in this document are based on current information. All content is subject to modifications and amendments. Information furnished is believed to be accurate and reliable. However, users should independently evaluate the suitability and test each product selected for their own applications.